Revision History				
Rev.	ECO	Description	Date	Approved

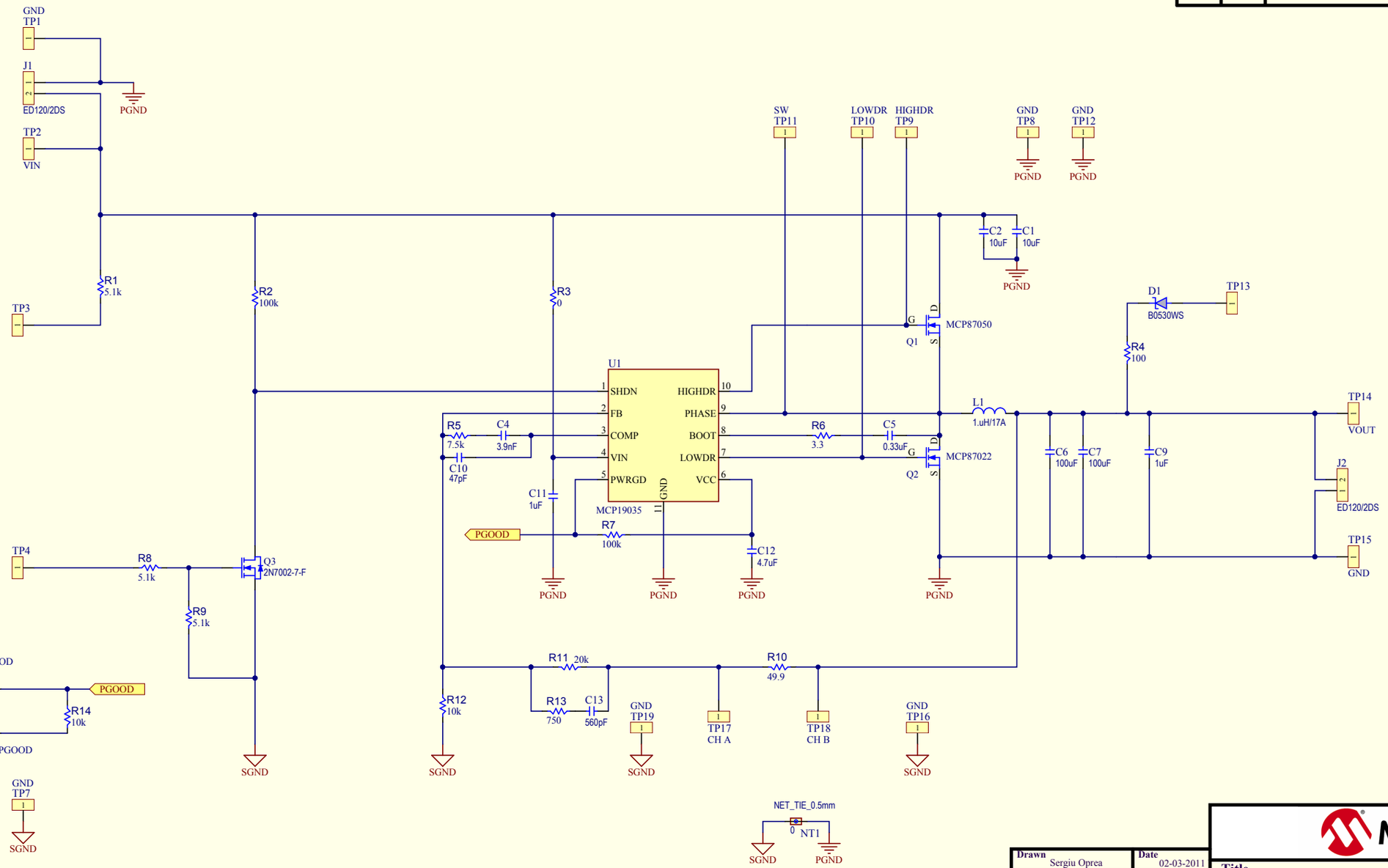

Drawn Sergiu Oprea	Date 02-03-2011	Title MCP19035 600kHz Evaluation Board	
Checked	Date		
Approved	Date		
Approved	Date		
Approved	Date		

Size	Doc. Number	Rev.
B	102-00445	2.0

Printed 10/17/2012 at 5:39:05 PM | Template FileName B_Microchip SCH.SchDoc | Sheet 1 of 1